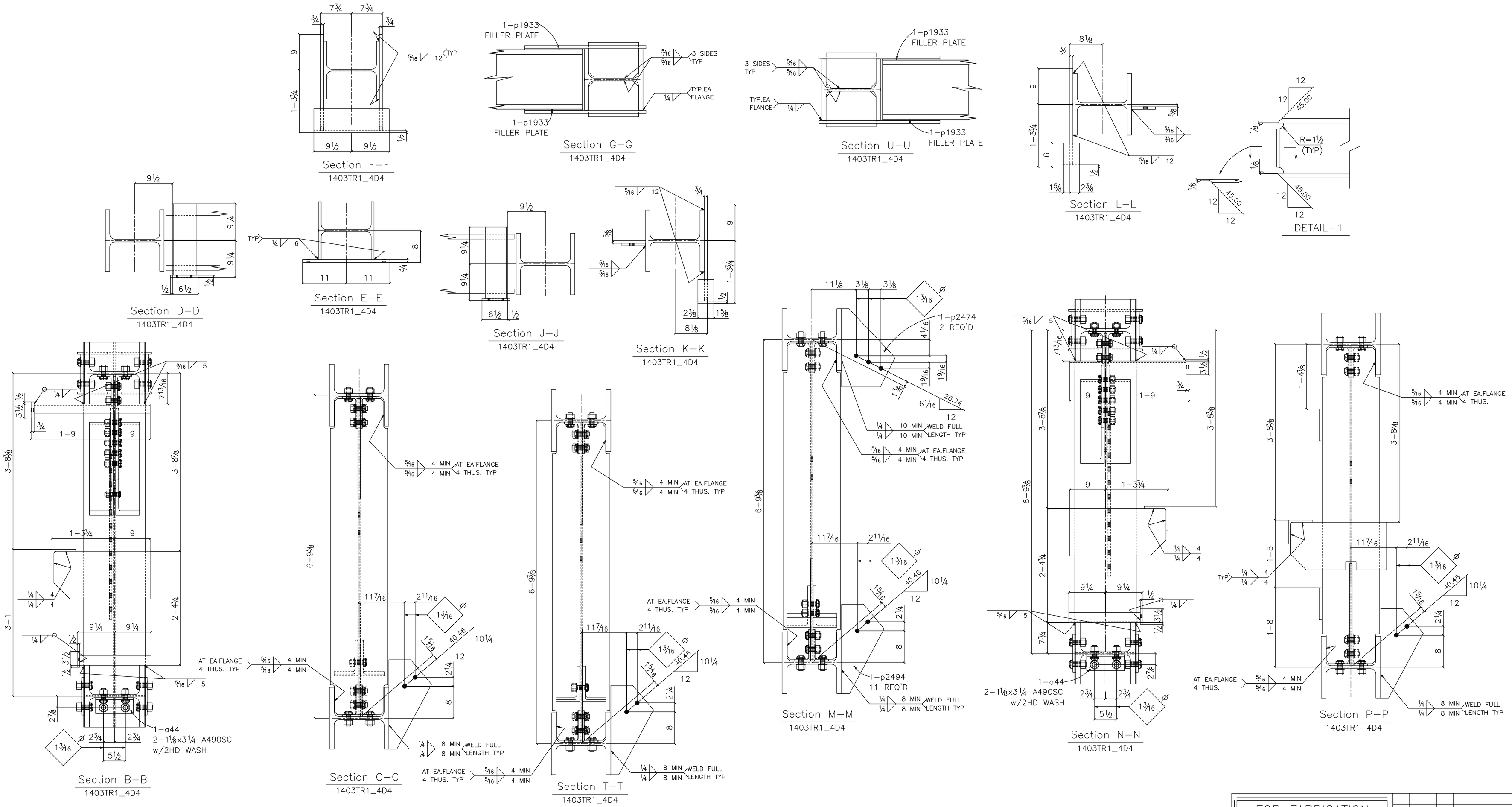

WORK THIS DRAWING IN CONJUNCTION WITH DRAWING 1403_4D,1404_4D,1405_4D,1406_4D

FOR FABRICATION				
PAINT: NO PAINT				
MATERIAL DOMESTIC ☒ NON–DOMESTIC ☐				
HOLES: 15/16 (U.N.O)				
ELECTRODES E70XX (LH FOR GR. 50)	0	10–15–09	VK	TRUSS DETAIL
	NO	DATE	BY	DESCRIPTION
	REVISIONS			

AISC ACTIVE MEMBER

		PHASE/SUFFIX 5400–30
		REVISION 0
DRAFTER: VK	CUSTOMER	CONTRACT NO.
DATE: 10–10	THE WHITING TURNER CONTRACTING COMPANY	82681–050
CHECKED: TM	STRUCTURE	DWG NO.
DATE: 10–10	MILLENNIUM SCIENCE COMPLEX	1407_4D

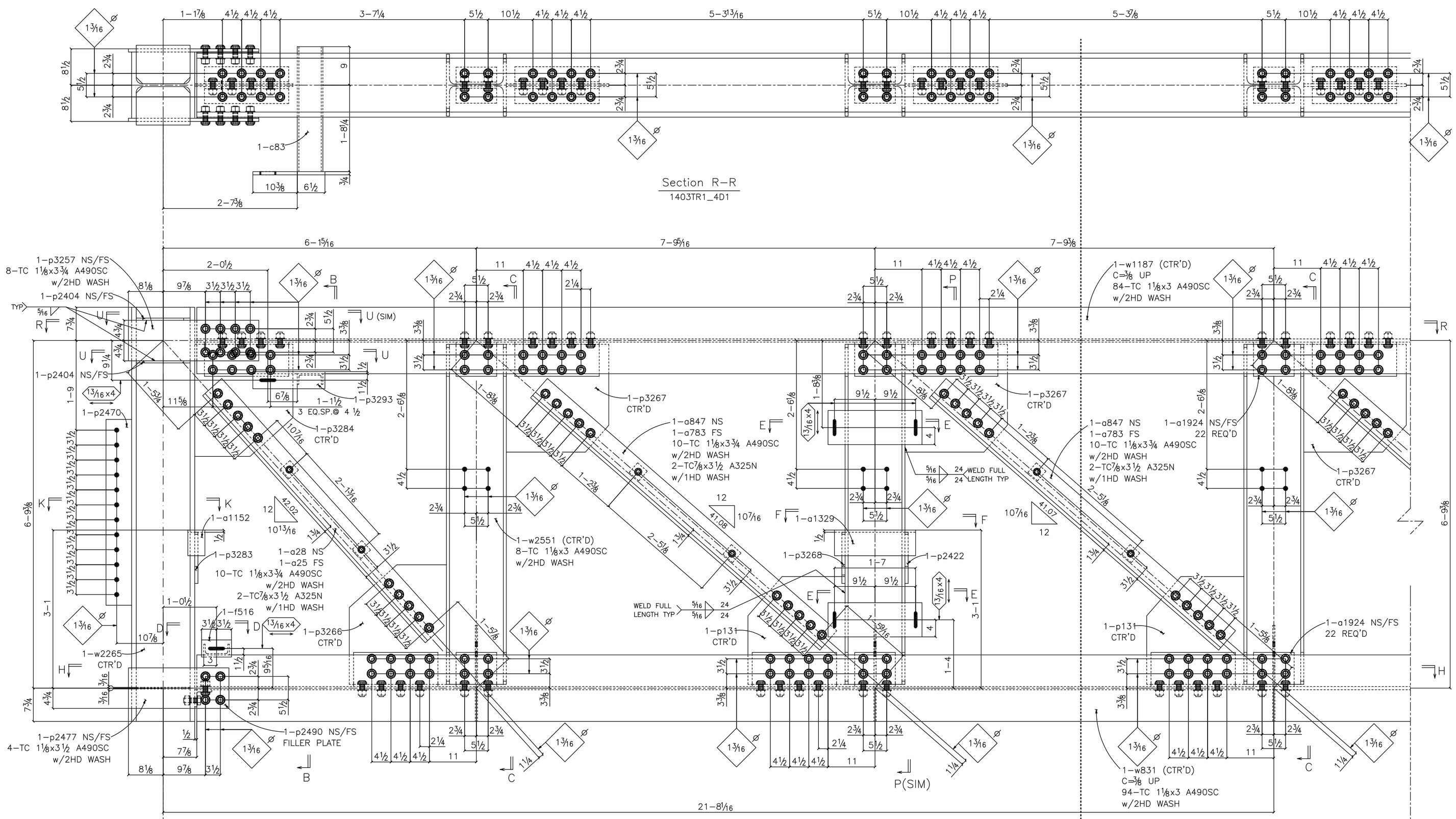

TOP & BOTTOM CHORD CAMBER BY WEAK AXIS.

NOTE:
SEE SHEET 1407_4D FOR SECTION, DETAILS AND ADDITIONAL NOTES

BILL OF MATERIAL

Shipping Mark	No. Pcs.	Material	Length Ft.	Length In.	Mark	Stl.Gr.	Remarks Notes/ ABM Marks
1403TR1_4D	ONE	TRUSS					
	1	W14x159	55	11½	w831	A992	C=⅜ 340–21
	1	W14x159	55	11½	w1187	A992	C=⅜ 343–10
	1	W14x159	32	8¾	w1201	A992	C=⅛ 343–9
	1	W14x159	32	8¾	w2069	A992	C=⅛ 343–9
	1	W14x145	8	0¹⁵⁄₁₆	w2265	A992	344–1
	1	W14x145	8	0¹⁵⁄₁₆	w2700	A992	344–1
	9	W14x90	6	7⅝	w1314	A992	344–3
	2	W14x90	6	7⅝	w2551	A992	344–3
	24	L8x4x ½	1	7¾	a1922	A36	
	24	L8x4x ½	1	7¾	a1923	A36	
	44	L8x4x ½	0	9½	a1924	A36	
	10	L6x6x ¾	7	5⅞	a783	A36	
	10	L6x6x ¾	7	5⅞	a847	A36	
	2	L6x6x ¾	6	5⅞	a25	A36	
	2	L6x6x ¾	6	5⅞	a28	A36	
	3	L6x6x ½	1	7	a1329	A36	
	2	L6x6x ½	0	4	a1152	A36	
	2	L4x4x ½	0	9½	a44	A36	
	2	MC6x12	2	5¼	c83	A992	344–5
	2	MC6x12	1	6	c70	A992	344–6
	4	PL¾x9½	2	6½	p3257	A36	
	2	PL¾x12	2	0¼	p3283	A36	
	2	PL¾x12	2	0¼	p2422	A36	
	2	PL¾x12	2	0¼	p3268	A36	
	2	PL¾x12	2	0¼	p3285	A36	
	6	PL¾x8	1	10	p2420	A36	
	2	PL¾x4	1	4⅞	p3293	A36	
	10	PL⅝x24	2	1¼	p3267	A36	
	2	PL⅝x23	2	2¼	p3284	A36	
	2	PL⅝x22¾	2	4	p3266	A36	
1	10	PL⅝x22¾	2	1¼	p131	A36	
	2	PL⅝x7⅛	2	7½	p1423A	A36	
	1	PL⅝x6	3	7½	p2470	A36	
	24	PL⅝x3	0	3	p2214	A36	
	2	PL½x13½	1	7¾	p2474	A36	
	11	PL½x10¾	1	10½	p2494	A36	
	4	PL½x9½	1	11½	p2477	A36	
	8	PL½x9	1	0⅝	p2404	A36	
	2	FL½x4	0	7	f516	A36	
	4	PL⅜x7⅜	1	0⅝	p844	A36	
	4	PL¼x9½	1	2½	p1933	A36	
	4	PL¼x7½	0	9½	p2490	A36	
	152	TC 1⅛ Dia A490SC	0	3¾			2HD WASH
	16	TC 1⅛ Dia A490SC	0	3½			2HD WASH
	192	TC 1⅛ Dia A490SC	0	3¼			2HD WASH
	4	1⅛ Dia A490SC	0	3¼			2HD WASH
	372	TC 1⅛ Dia A490SC	0	3			2HD WASH
	24	TC⅞ Dia A325N	0	3½			1HD WASH

WORK THIS DRAWING IN CONJUNCTION WITH DRAWING 1404_4D,1405_4D,1406_4D,1407_4D

FOR FABRICATION

PAINT: NO PAINT
MATERIAL DOMESTIC ☒ NON–DOMESTIC ☐
HOLES: 15⁄16 (U.N.O)
ELECTRODES E70XX (LH FOR GR. 50)

NO	DATE	BY	DESCRIPTION
1	04–03–10	VK	PLATE REVISED
0	10–15–09	VK	TRUSS DETAIL
A	07–14	VK	TRUSS DETAIL

REVISIONS

ACTIVE MEMBER

DRAFTER: VK	CUSTOMER THE WHITING TURNER CONTRACTING COMPANY	PHASE/SUFFIX 5400–30
DATE: 07–13		REVISION 1
CHECKED: TM	STRUCTURE MILLENNIUM SCIENCE COMPLEX	CONTRACT NO. 82681–050
DATE: 07–13		DWG NO. 1403_4D

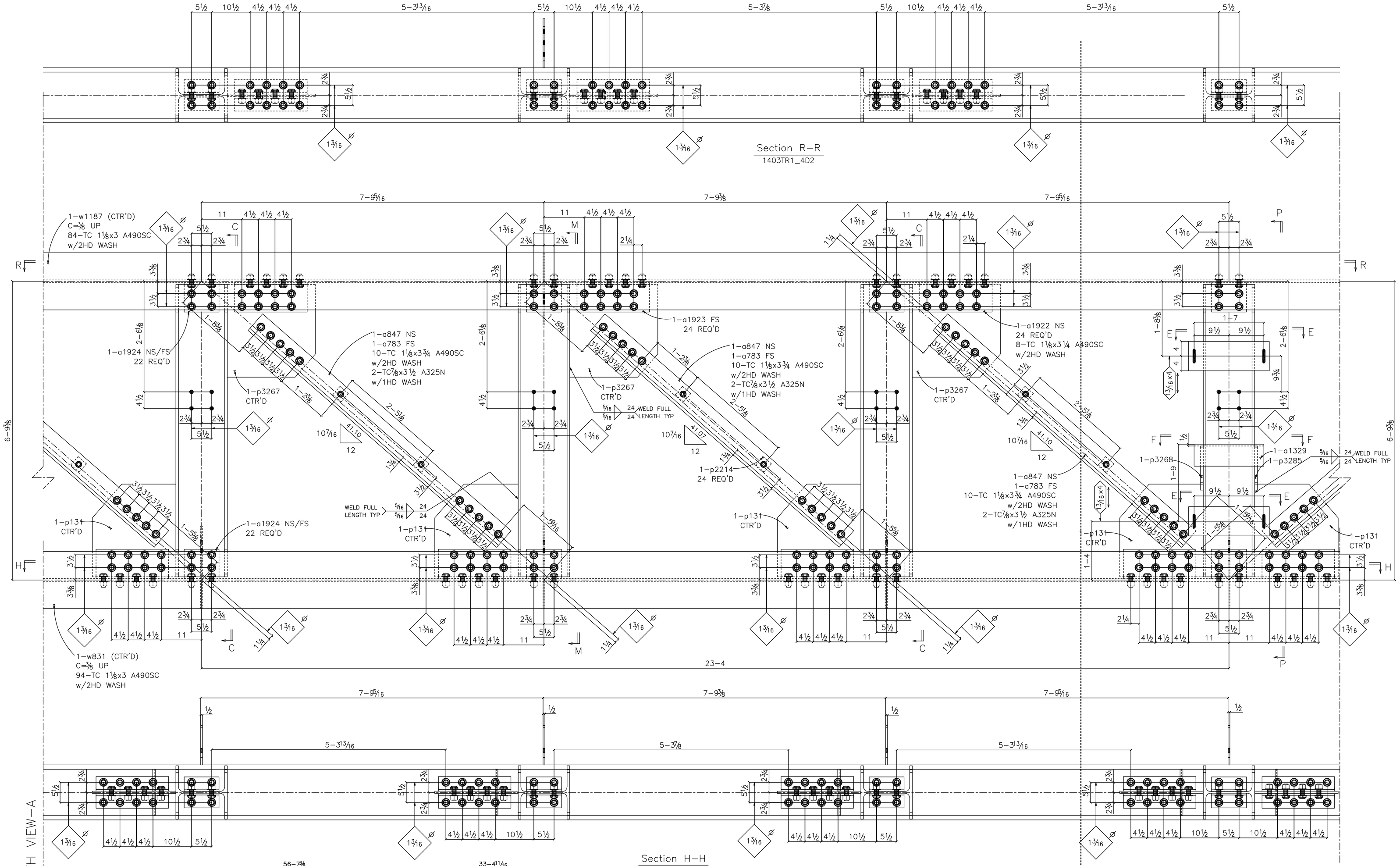

NOTE:
SEE SHEET 1407_4D FOR SECTION, DETAILS AND ADDITIONAL NOTES

WORK THIS DRAWING IN CONJUNCTION WITH DRAWING 1403_4D,1405_4D,1406_4D,1407_4D

FOR FABRICATION

PAINT: NO PAINT
MATERIAL DOMESTIC ☒ NON-DOMESTIC ☐
HOLES: 15⁄16 (U.N.O)
ELECTRODES E70XX (LH FOR GR. 50)

NO	DATE	BY	DESCRIPTION
0	10–15–09	VK	TRUSS DETAIL

REVISIONS

ACTIVE MEMBER

DRAFTER: VK	CUSTOMER	PHASE/SUFFIX 5400–30
DATE: 10–10	THE WHITING TURNER CONTRACTING COMPANY	REVISION 0
CHECKED: TM	STRUCTURE	CONTRACT NO. 82681–050
DATE: 10–10	MILLENNIUM SCIENCE COMPLEX	DWG NO. 1404_4D

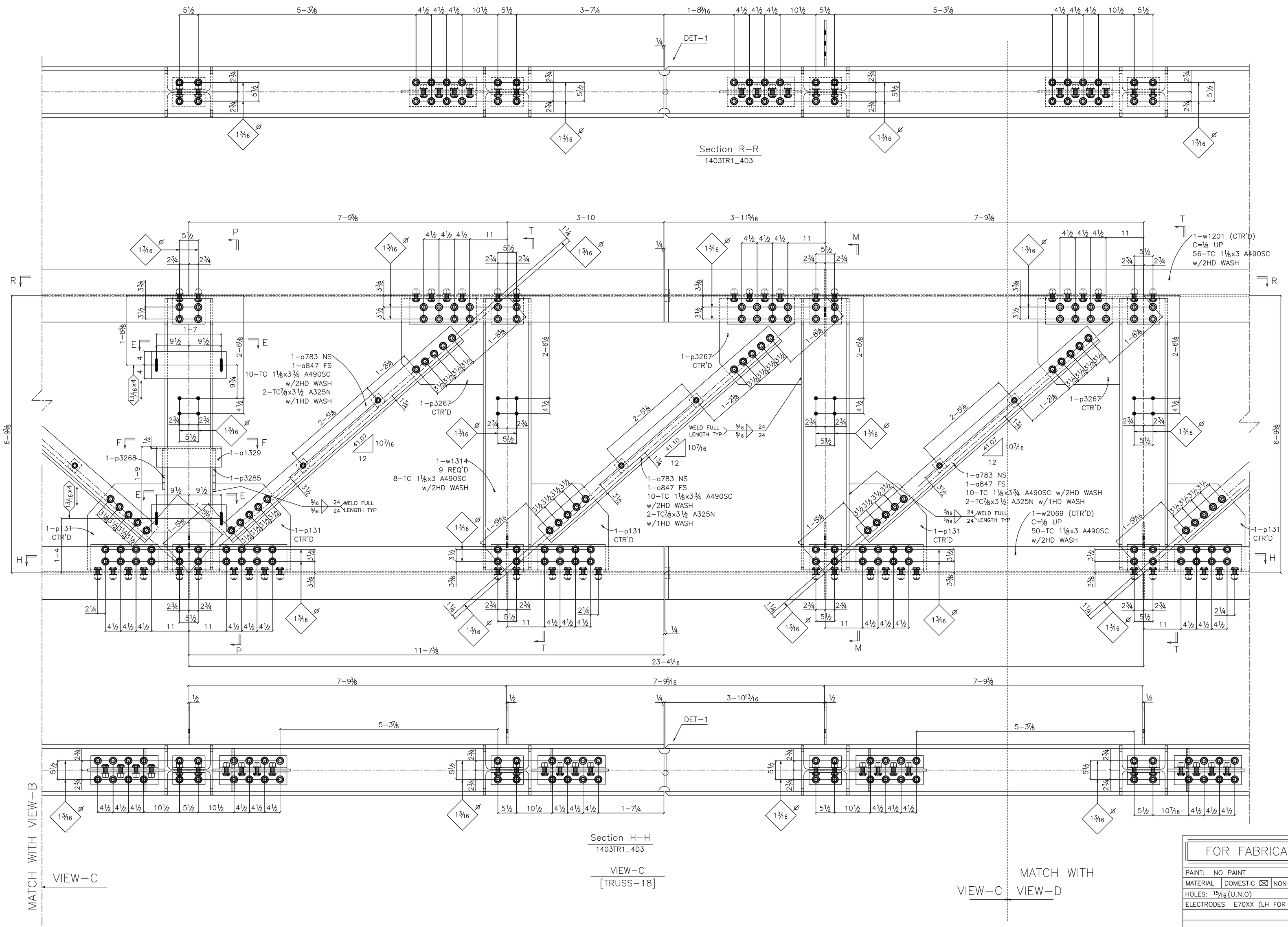

NOTE:
SEE SHEET 1407_4D FOR SECTION, DETAILS AND ADDITIONAL NOTES

WORK THIS DRAWING IN CONJUNCTION WITH DRAWING 1403_4D,1404_4D,1406_4D,1407_4D

FOR FABRICATION			
PAINT: NO PAINT			
MATERIAL DOMESTIC ☒ NON–DOMESTIC ☐			
HOLES: 15⁄16 (U.N.O)			
ELECTRODES E70XX (LH FOR GR. 50)	0	10–15–09	VK	TRUSS DETAIL
	NO	DATE	BY	DESCRIPTION
	REVISIONS			

AISC ACTIVE MEMBER

PHASE/SUFFIX: 5400–30
REVISION: 0

DRAFTER: VK
DATE: 10–10
CHECKED: TM
DATE: 10–10

CUSTOMER: THE WHITING TURNER CONTRACTING COMPANY

STRUCTURE: MILLENNIUM SCIENCE COMPLEX

CONTRACT NO. 82681–050

DWG NO. 1405_4D

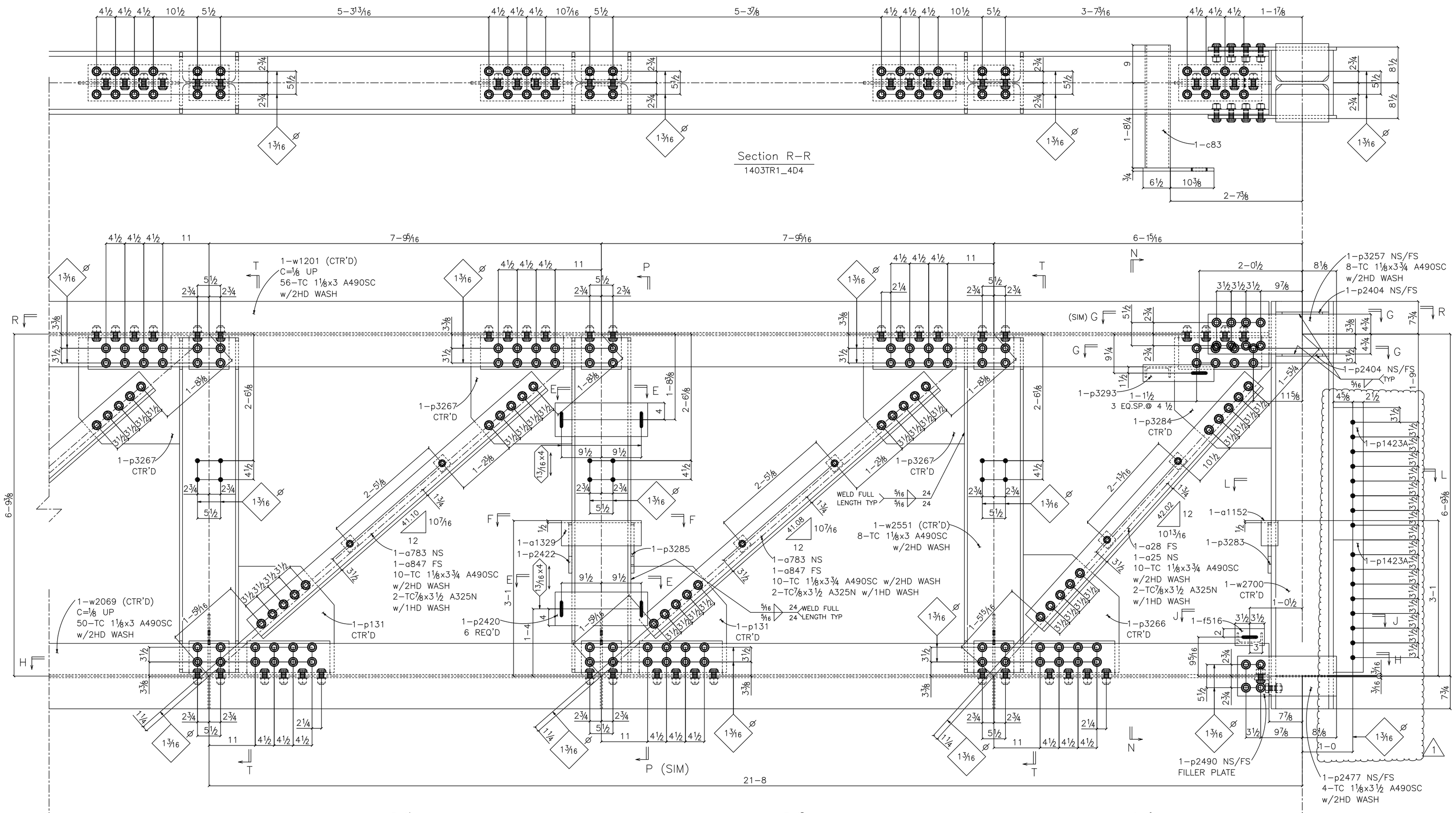

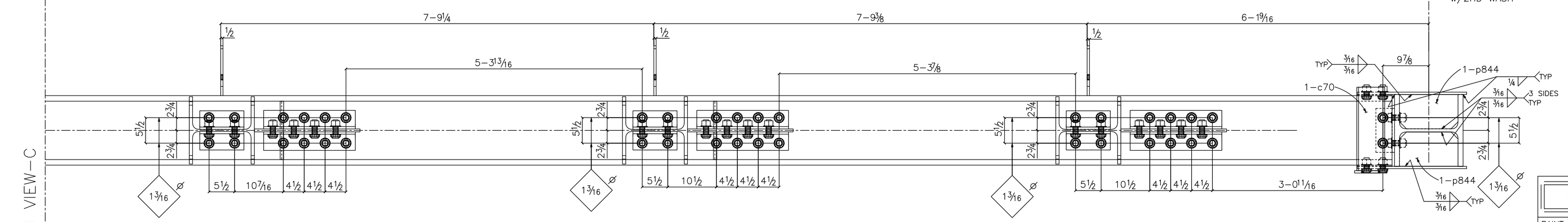

NOTE:
SEE SHEET 1407_4D FOR SECTION, DETAILS AND ADDITIONAL NOTES

WORK THIS DRAWING IN CONJUNCTION WITH DRAWING 1403_4D,1404_4D,1405_4D,1407_4D

FOR FABRICATION			
PAINT: NO PAINT			
MATERIAL DOMESTIC ☒ NON-DOMESTIC ☐			
HOLES: 15/16 (U.N.O)	1	04-03-10 VK	PLATE REVISED
ELECTRODES E70XX (LH FOR GR. 50)	0	10-15-09 VK	TRUSS DETAIL
	NO	DATE	BY DESCRIPTION
	REVISIONS		

AISC ACTIVE MEMBER

DRAFTER: VK	CUSTOMER	PHASE/SUFFIX 5400–30
DATE: 10–10	THE WHITING TURNER CONTRACTING COMPANY	REVISION 1
CHECKED: TM	STRUCTURE	CONTRACT NO. 82681–050
DATE: 10–10	MILLENNIUM SCIENCE COMPLEX	DWG NO. 1406_4D